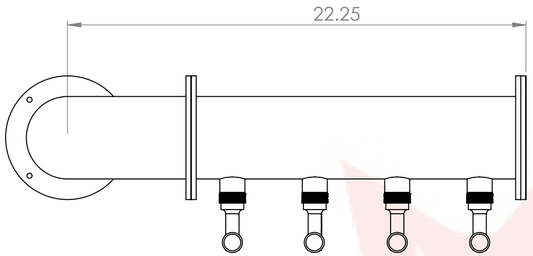

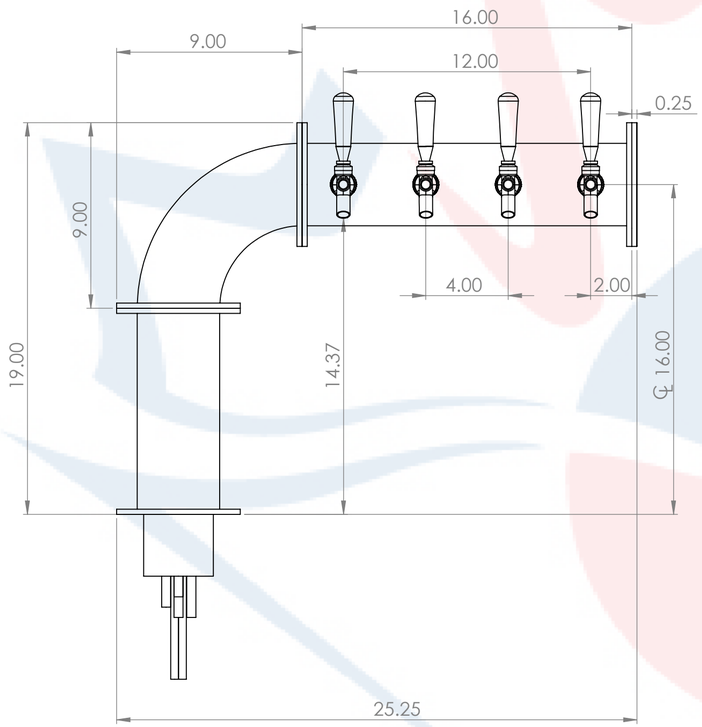

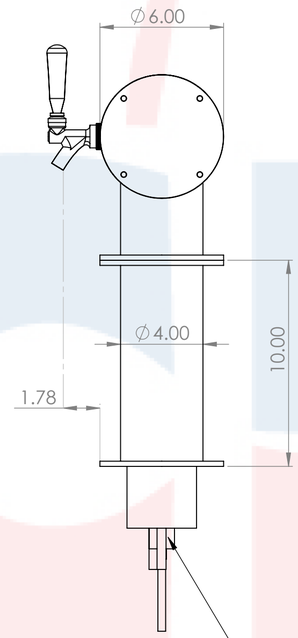

304SS tube connected to CBS NSF Flexible
Total Barrier Tubing to 15lbs of Restriction

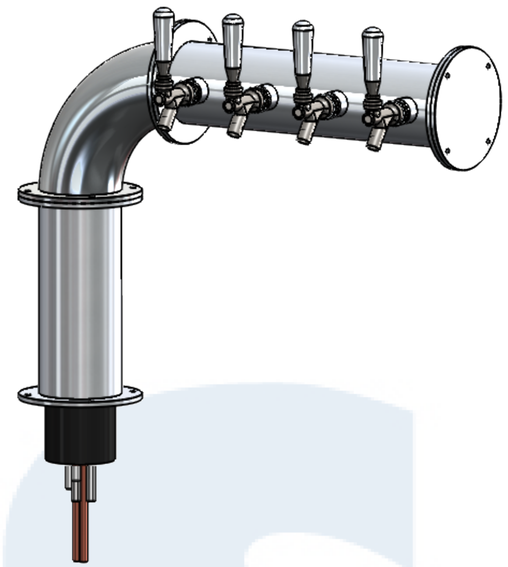

Isometeric View
(For reference purpose only)

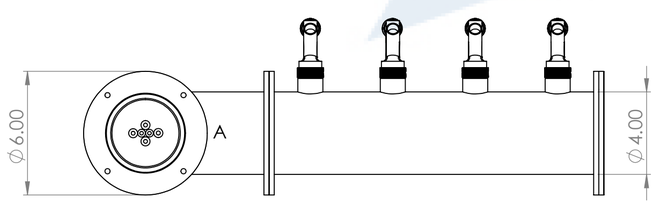

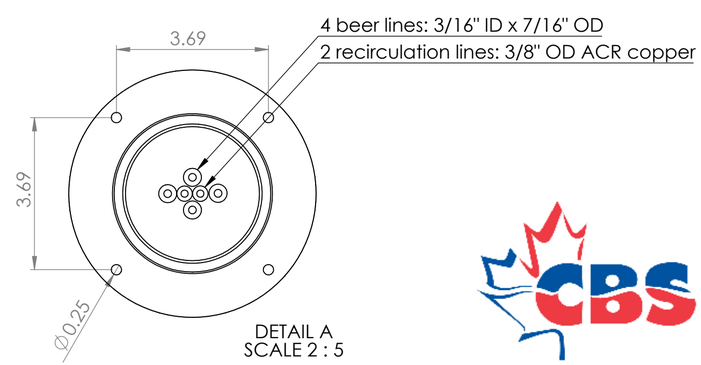

DETAIL A
SCALE 2 : 5

Suggested Drip Tray:
BB701316 - 16" x 7" BSS Drip Tray
BB702416 - 16" x 7" BSS Spray Drip Tray

	Name		Date	Title:
Drawn by:	Canadian Beverage Supply Inc.		08/05/2020	4" 4 Tap LINX L7 Tower
Approved by:	VP Sales			
Material:	304 SS	Finish:	Polished SS	Part Number: BB102615-04SSCK / Revision:
Unless otherwise mentioned, dimensions are inches				SCALE: 1:5 / SHEET 1 OF 1